STANDARD AND NSF7 DROP-IN ITEM NUMBERS
FC-4C-01120-R
FC-4C-02120-R
FC-4C-03120-R
FC-4C-04120-R
FC-4C-05120-R
FC-4C-06120-R
FC-4C-01120-N
FC-4C-02120-N
FC-4C-03120-N
FC-4C-04120-N
FC-4C-05120-N
FC-4C-06120-N

BALLOON NUMBER	ITEM NUMBER	DESCRIPTION
1	26730-3	DRAIN HOSE-5/8"ID CLEAR VINYL
2	26883-3	CLAMP-HOSE 7/8" OD TUBING
3	26723-3	ADAPTOR-1/2" NPT X 1/2 HOSE
4	26896-1	VALVE-1/2" FNPT MINI-BALL
5	26543-3	STRAIN RELIEF - FOR 3/8 CORD
N/A	4350810-1	CONNECTOR, 2 WIRE WAGO 221-412
N/A	4350811-1	CONNECTOR, 3 WIRE WAGO 221-413
6	24787-1	SWITCH-120/277V 15A SINGLE POL
7	23035-3	THUMBSCREW 1/4-20 X 2"
8	44179-1	DROP-IN MOUNTING CLIP
9	351333-1	FILTER DRIER DCL 032
10	SEE TABLE	CONDENSING UNIT
11	2503379-1	RELAY, SPDT,120V COIL
12	17085-1	16 GA. POWER CORD 120V
13	SEE TABLE	THERMAL EXPANSION VALVE KIT
14	351897-1	MOTOR-FAN 6W115SHORT
15	351898-1	CONTROLLER- ELECT UNIT

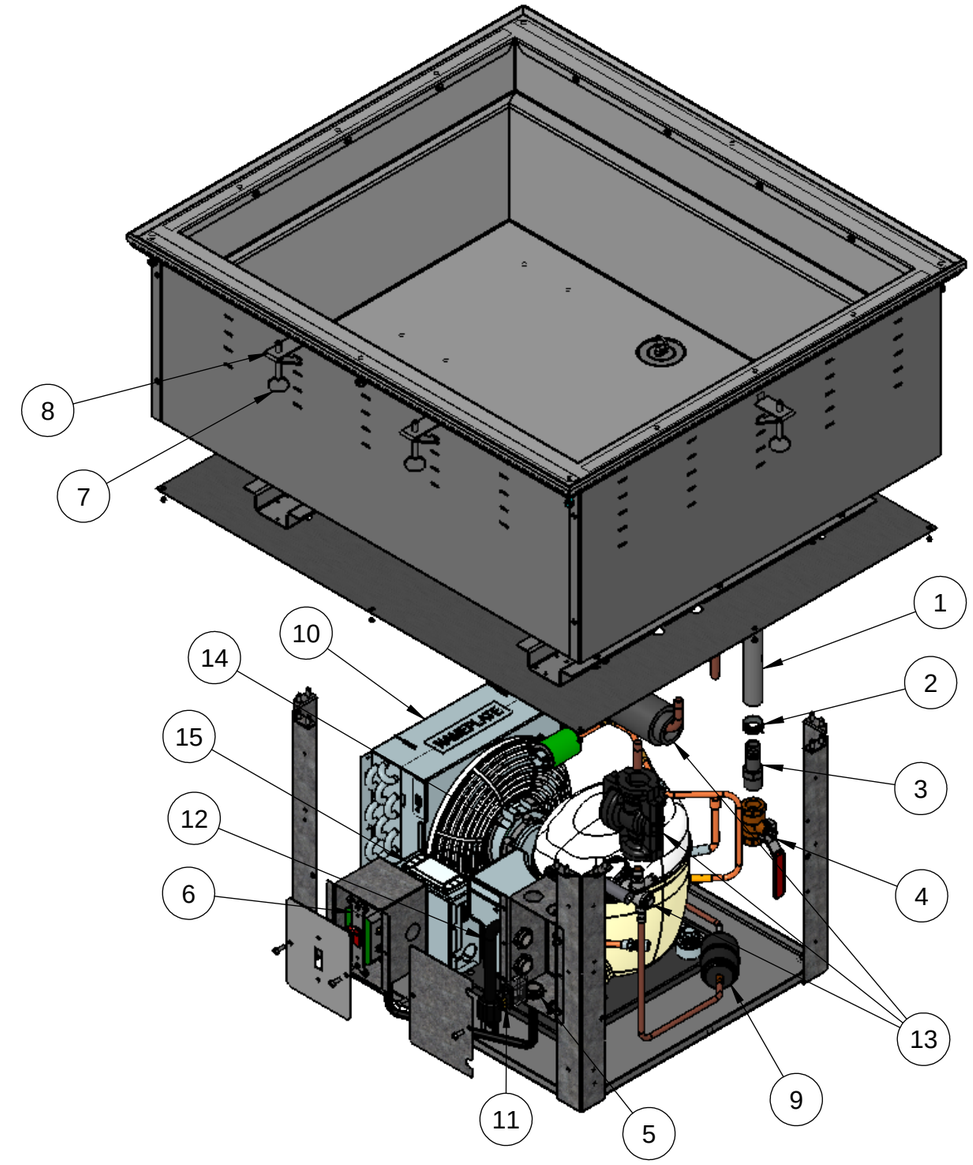

BALLOON NUMBER	ITEM NUMBER	DESCRIPTION	FC-4C-01120-R	FC-4C-02120-R	FC-4C-03120-R	FC-4C-04120-R	FC-4C-05120-R	FC-4C-06120-R
			FC-4C-01120-N	FC-4C-02120-N	FC-4C-03120-N	FC-4C-04120-N	FC-4C-05120-N	FC-4C-06120-N
10	351332-1	R513A COND UNIT 1/5 HP W/EUC	X	X	X			
10	351644-1	R513A COND UNIT 1/3 HP W/EUC				X	X	X
N/A	351893-2	KIT, ELEC PARTS AFF07C1E-IAA	X	X	X			
N/A	351931-2	KIT, ELEC PARTS AFE12C4E-IAA				X	X	X
13	351890-2	KIT, TXV ORIF 0	X					
13	351929-2	KIT, TXV ORIF 1		X	X			
13	351930-2	KIT, TXV ORIF 4				X	X	X

É 2019 Document No. FC-4C-R-N-SPR_EN Rev. A